HDWVPIPE
Bolted bracket

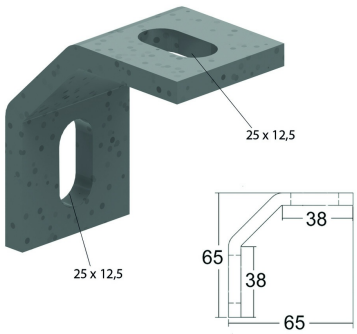

Standard finish		Hot-dip galvanised							
HD	Reference	↕ mm	↔ mm	→‖← mm	⇄ mm	kg/stk		Stock	Unit
-	**HDWVPIPE**	65	65	6,5		0,190	10	X	STK