P171
Long U-Bolt 250mm M12

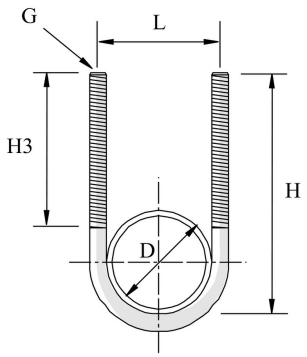

Standard finish: Electro zinc-plated

HD	Reference	↕ mm	↔ mm	→‖← mm	⇄ mm	kg/stk	📦	Stock	Unit
-	**171003402**	41		M6	41	0,050	100		STK
-	**171004212**	52		M8	52	0,100	100		STK
-	**171004812**	57		M8	57	0,110	100		STK
-	**171004822**	59		M10	59	0,130	100		STK
-	**171006012**	71		M8	71	0,130	100		STK
-	**171006022**	73		M10	73	0,150	100		STK
-	**171016842**	240			186	0,700	25		STK
-	**171007622**	89		M10	89	0,160	100		STK
-	**171008922**	100		M10	100	0,190	50		STK
-	**171011422**	124		M10	124	0,210	50		STK
-	**171013932**	213			156	0,360	25		STK
-	**171016832**	182		M12	182	0,400	25		STK
-	**171027332**	290		M12	290	0,700	1		STK

Abbreviation:
- ZP = Zinc Plated