HDKS60
Cable ladder DAVID

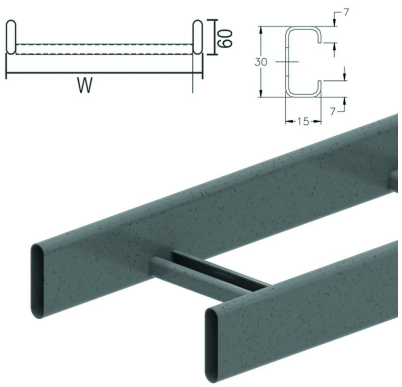

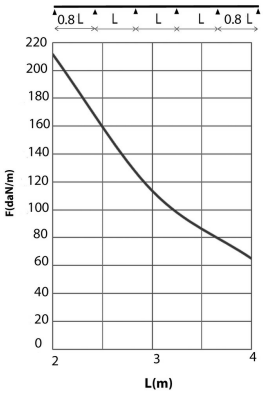

Tubular side walls.
Perforated C-rungs 15x30

Standard finish						Hot-dip galvanised			
HD	Reference	↕ mm	↔ mm	→‖← mm	⇄ mm	kg/m	⬡	Stock	Unit
-	**HDKS60.200**	60	200		6000	2,800	60	X	M
-	**HDKS60.300**	60	300		6000	3,080	60	X	M
-	**HDKS60.400**	60	400		6000	3,320	60	X	M
-	**HDKS60.500**	60	500		6000	3,530	60	X	M
-	**HDKS60.600**	60	600		6000	3,870	60	X	M

LOAD DIAGRAM
This diagram illustrates the permissible uniformly distributed horizontal loads applied to multiple supports. They comply with IEC 61537 with connection to 1/5 of the span and the end span = 0,8x the span.

F = max. admissible load (daN/m)
L = support distance (m)
Max. deflection (m) = L/100

CHARACTERISTICS
- lightweight
- strong
- rounded tubular side-walls eliminate the risk of cable damage
- hot-dip galvanised as standard
- wrap around joiners with pre-assembled tap bolts ensure a fast secure connection
- rungs are perforated to enable efficient attachment of cables.
- partition (ZMSLOS35) can be fixed to the cable ladder with a sliding nut (GM6) and pan head bolt (HDRB6.10).

TECHNICAL INFORMATION
- Side walls are constructed from tubular section 60 mm x 15 mm.
- C-rungs are fixed at 250 mm intervals.
- Rungs are welded to the side wall of the cable ladder.
- Rungs are alternately placed with openings upwards and downwards.

Fix with:

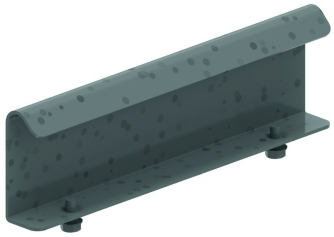

Joiner for HDKS
HDSSU