HDVSIE

Floor support for HDKLIE

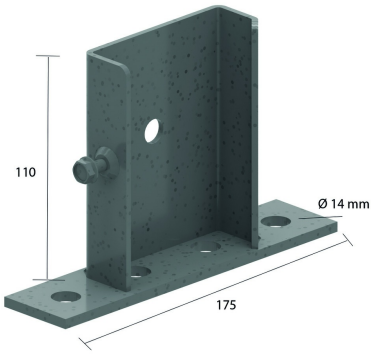

To mount the cable ladder vertically on the floor.
Slides over the side wall.

Standard finish	Hot-dip galvanised

HD	Reference	↕ mm	↔ mm	→‖← mm	⇄ mm	kg/stk		Stock	Unit
-	**HDVSIE**	115	88			0,640	6	X	STK

Premounted with tapbolt 6x12.