HDBKIE25

Bracket clamp for HDKLIE

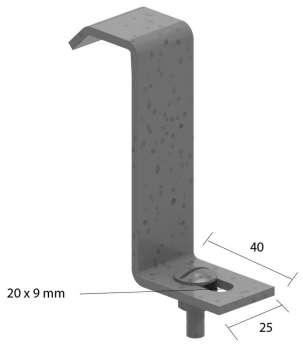

To mount the cable ladder on a bracket.

Standard finish Hot-dip galvanised

HD	Reference	↕ mm	↔ mm	→‖← mm	⇄ mm	kg/stk	📦	Stock	Unit
-	**HDBKIE25**	83	25			0,090	20	X	STK

Included: Bolt HDRB6.20 and flanged nut RM6.