# AF
## Montagewerkzeug

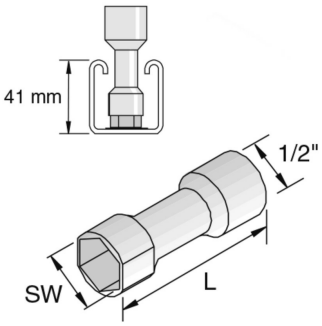


Standardausführung — Sendzimir verzinkt

| HD | Referenz | ↕ mm | ↔ mm | →‖← mm | ⇄ mm | kg/stk | 📦 | Lager | Einheit |
|---|---|---|---|---|---|---|---|---|---|
| - | **17AF** | | | | 41 | 0,125 | 1 | X | STK |
| - | **17AF/P3300** | | | | 21 | 0,125 | 1 | | STK |
| - | **17AF/LONG** | | | | 107 | 0,125 | 1 | | STK |
| - | **19AF** | | | | 41 | 0,135 | 1 | X | STK |
| - | **19AF/LONG** | | | | 170 | 0,135 | 1 | | STK |

17AF: M10
19AF: M12